LD67D6S-A/B/C

InGaAlP Laser Diode

Quantum Semiconductor International Co., Ltd.

Ver. 0 JAN. 2004

♦OVERVIEW

LD67D6S-A/B/C is a MOCVD grown 670nm band **Gain-Guided** type *InGaAlP* laser diode with quantum well structure. It's an attractive light source, with a typical light output power of 5mW for optoelectronic devices such as Bar Code Reader.

♦APPLICATION

- Optical Leveler
- Laser Module
- Bar Code Reader

♦FEATURES

- Visible Light Output : λp = 670 nm
- Optical Power Output : 5mW CW
- Package Type : TO-18 (5.6mmϕ)
- Built-in Photo Diode for Monitoring Laser Diode

♦ELECTRICAL CONNECTION

Bottom View

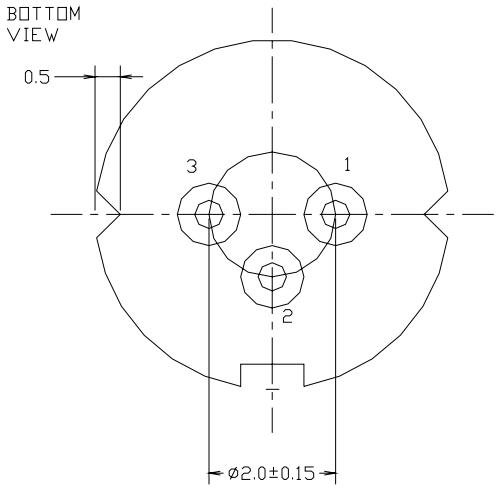

Pin Configuration

A	LD cathode, PD anode (Fig. 1)
B	LD , PD anode (Fig. 2)
C	LD anode, PD cathode (Fig. 3)

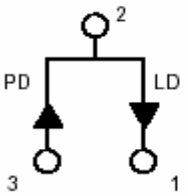

Fig. 1
LD67D6SA

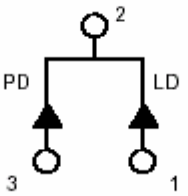

Fig. 2
LD67D6SB

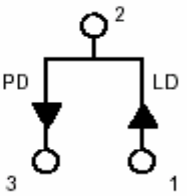

Fig. 3
LD67D6SC

♦ABSOLUTE MAXIMUM RATING at Tc=25°C

Items	Symbols	Values	Unit
Optical Output Power	P	7	mW
Laser Diode Reverse Voltage	V	2	V
Photo Diode Reverse Voltage	V	30	V
Operating Temperature	Topr	–10 ~ +60	°C
Storage Temperature	Tstg	–40 ~ +85	°C

♦ELECTRICAL and OPTICAL CHARACTERISTICS at Tc=25°C

Items	Symbols	Min.	Typ.	Max.	Unit	Condition
Optical Output Power	Po	-	5	-	mW	-
Threshold Current	Ith	-	40	60	mA	-
Operating Current	Iop	-	50	70	mA	Po=5mW
Operating Voltage	Vop	-	2.3	2.6	V	Po=5mW
Lasing Wavelength	λp	660	670	680	nm	Po=5mW
Beam Divergence	θ ‖	8	11	15	deg	Po=5mW
	θ ⊥	24	32	35	deg	Po=5mW
Beam Angle	Δθ ‖	-	-	±1.5	deg	Po=5mW
	Δθ ⊥	-	-	±2.5	deg	Po=5mW
Monitor Current	Im	0.1	0.2	0.5	mA	Po=5mW
Astigmatism	As		30		μm	
Optical Distance	ΔX, ΔY, ΔZ	-	-	±60	μm	-

NOTICE : LD67D6S-A/B/C to be operated on APC

The above product specifications are subject to change without notice.

♦ EXAMPLE of REPRESENTATIVE CHARACTERISTICS

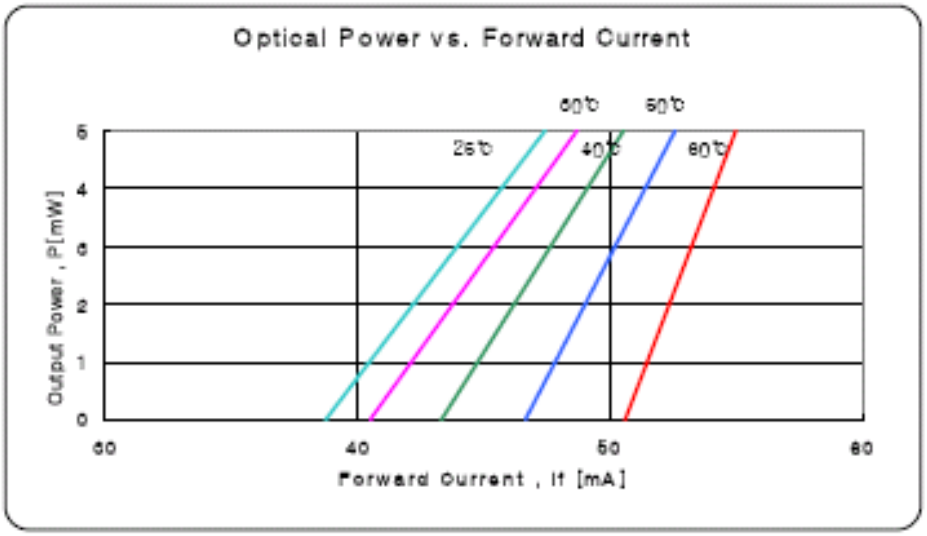

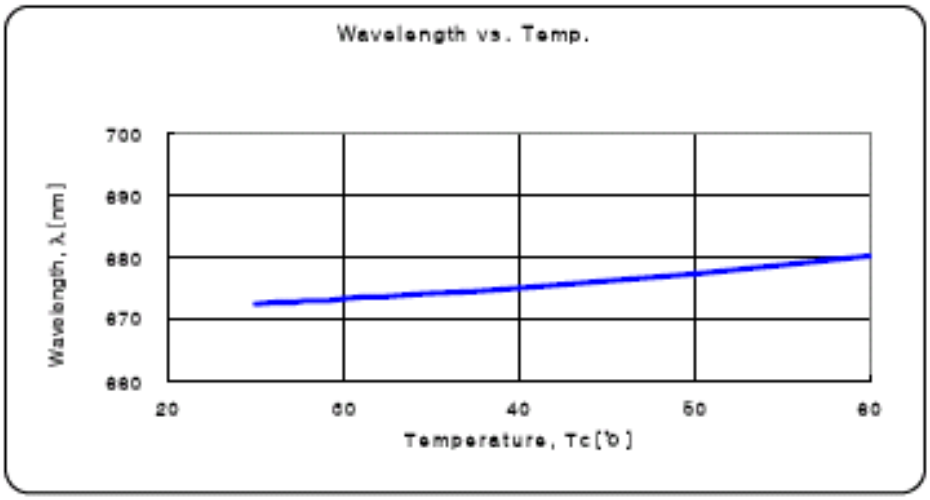

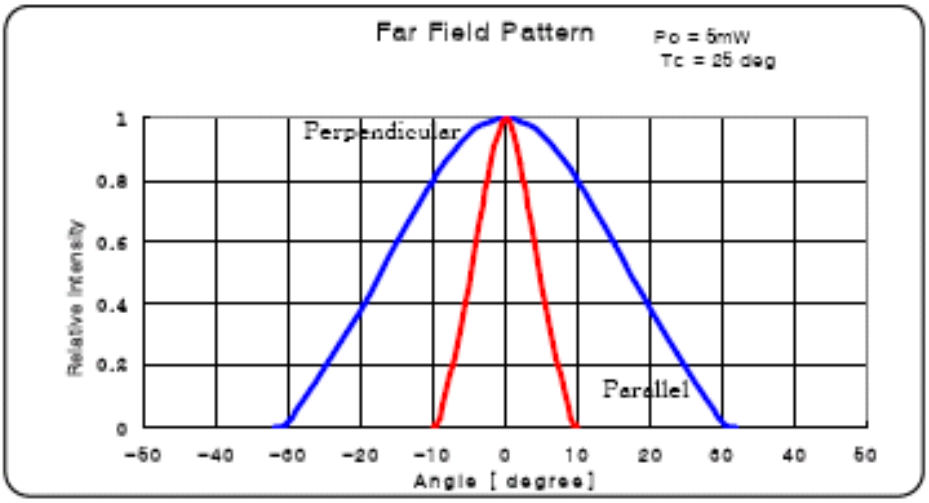

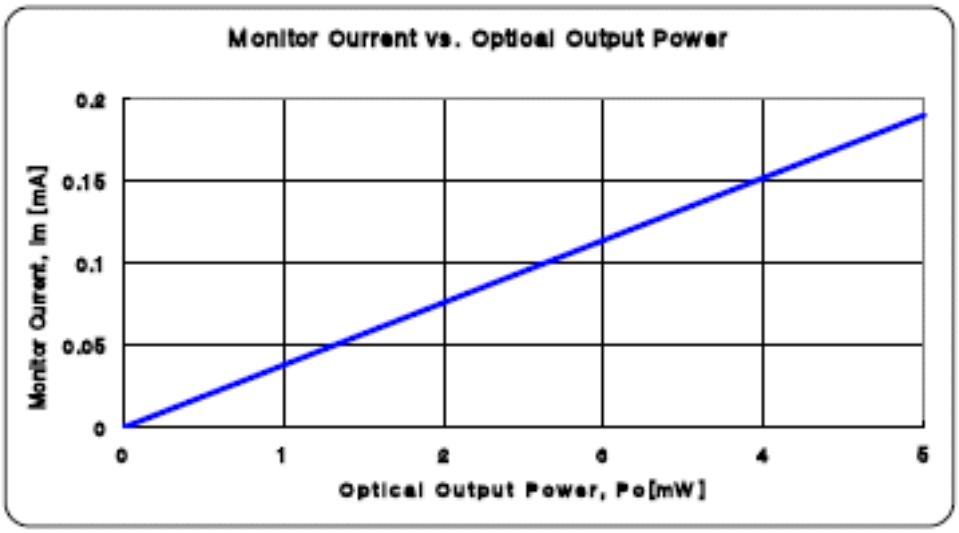
Monitor Current vs. Optical Output Power
Monitor Current, Im [mA]
0.2
0.15
0.1
0.05
0
0
1
2
3
4
5
Optical Output Power, Po[mW]

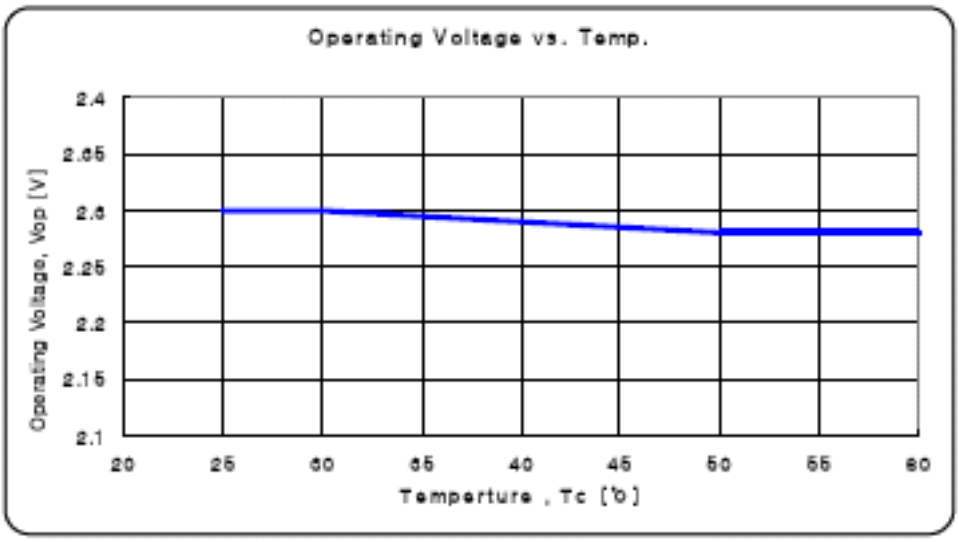
Operating Voltage vs. Temp.
Operating Voltage, Vop [V]
2.4
2.35
2.3
2.25
2.2
2.15
2.1
20
25
30
35
40
45
50
55
60
Temperture , Tc [℃]

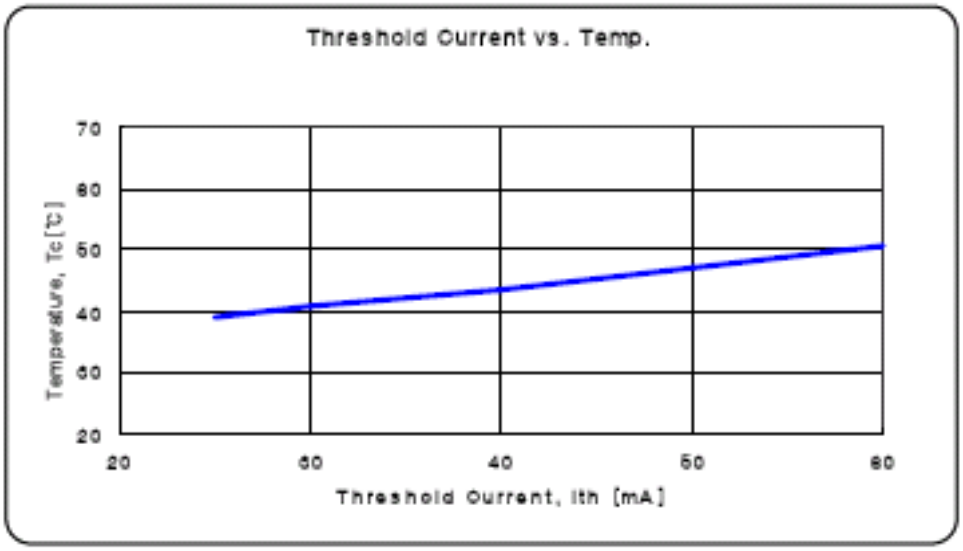
Threshold Current vs. Temp.
Temperature, Tc [℃]
70
60
50
40
30
20
20
30
40
50
60
Threshold Current, Ith [mA]

♦ PACKAGE DIMENSION

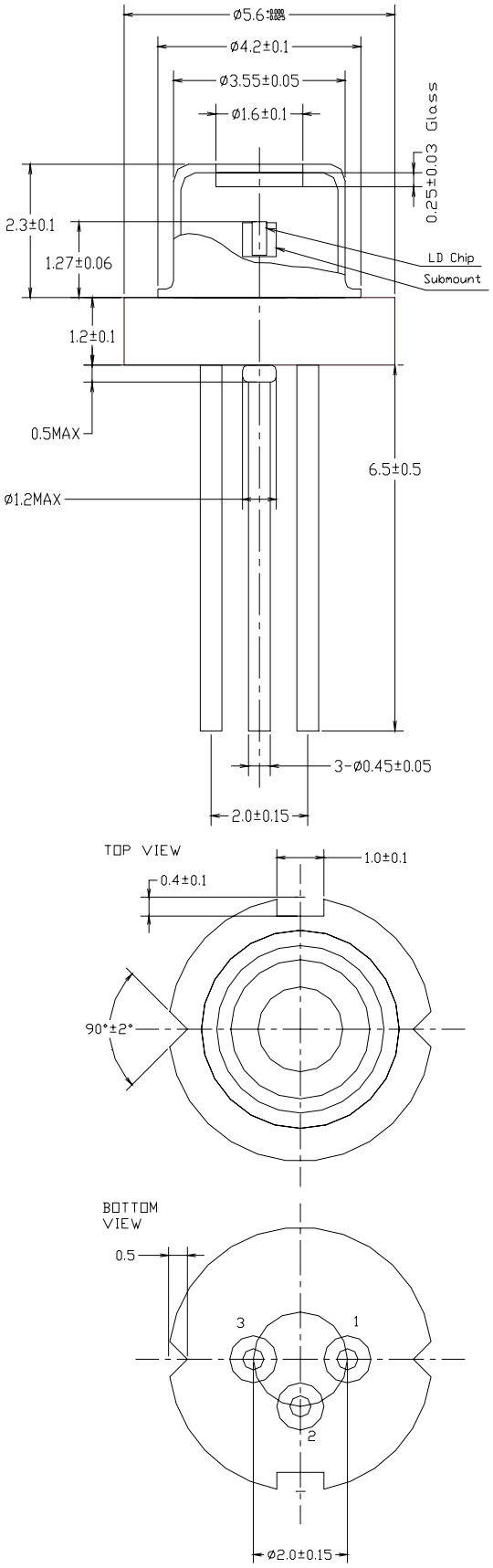

♦PACKING

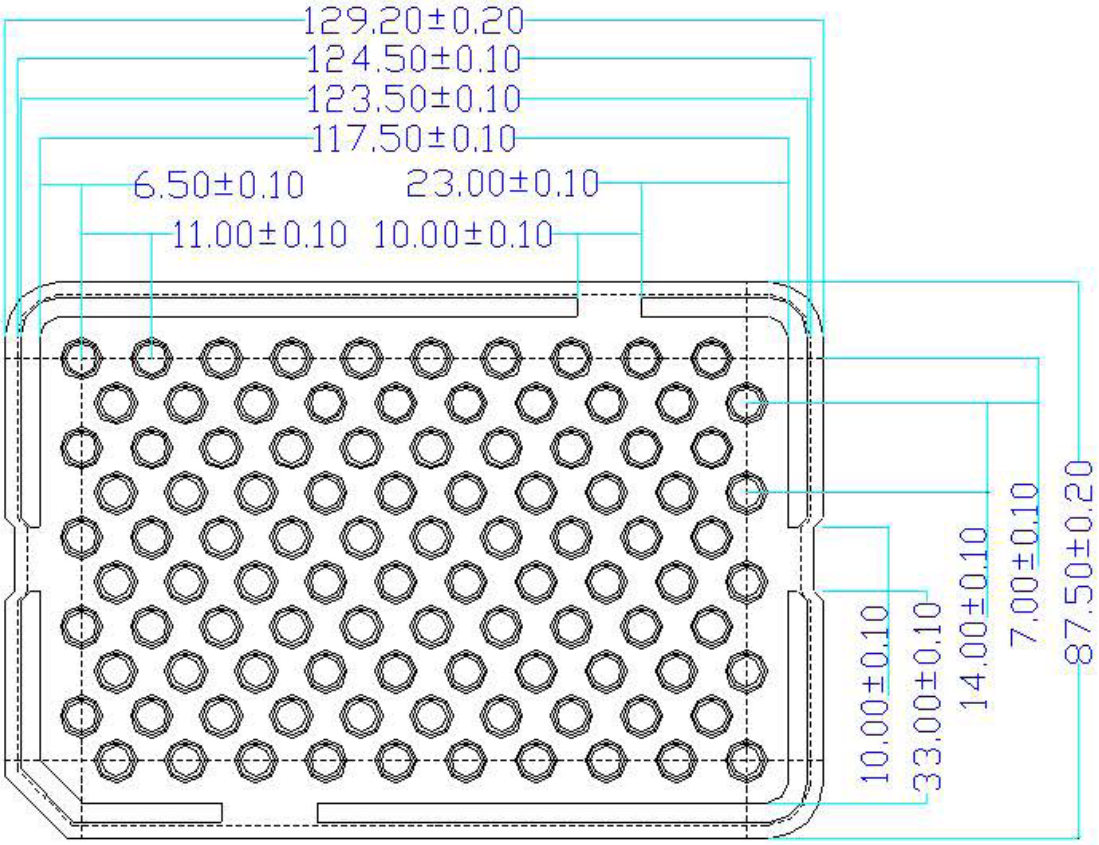

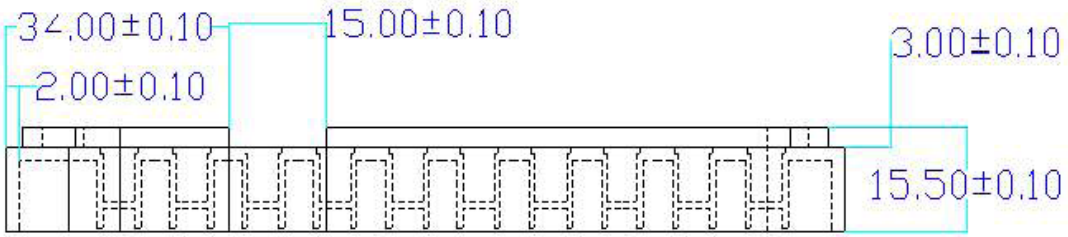

First Sensor

International Sales

First Sensor AG
Peter-Behrens-Str. 15
12459 Berlin
Germany
T +49 30 6399 2399
F +49 30 6399 23-752
sales.opto@first-sensor.com
www.first-sensor.com

US Sales

First Sensor Inc.
5700 Corsa Avenue #105
Westlake Village, CA 91362
USA
T +1 818 7063 400
F +1 818 8897 053
sales.us@first-sensor.com
www.first-sensor.com

QSI Co., Ltd.